CALIBRATION PLAN

J. YOUNG

9/92
92-0620-C

PRESENTATION AGENDA

HUGHES

SANTA BARBARA RESEARCH CENTER
a subsidiary

- CALIBRATION REQUIREMENTS
- CALIBRATION STRATEGY
- MATH MODELS
- TESTING METHODOLOGY
- GSE OPTICAL STIMULI
- ON-BOARD CALIBRATION CAPABILITY

9/92
92-0620-147B

Parameter	Phase C/D Requirement	Predicted Preflight	Predicted On-Orbit
Radiometric Calibration (Absolute)			
Below 3000 nm	5%	4%	3%**
Above 3000 nm	1%	1%	1%**
Reflectance	2%	4%	2%
Spectral Characterization (Knowledge)			
Center Wavelength	0.5 nm preflight 1.0 nm on-orbit	0.5 nm	1.0 nm*
Spectral Band-to-Band Stability	0.5% FS 1.0% HS	0.5% FS 1.0% HS	0.5% FS
Geometric Characterization			
Band-to-Band Registration	0.1 IFOV	0.05 IFOV	0.1 IFOV
Diffuser BRDF			
<2.0 µm	1.0%		
2.0 to 2.5 µm	1.5%		

FS = Full Scale HS = Half Scale

* Dependent on good correlation with full aperture ground measurement and SRCA subaperture measurements

** Multiple calibration methodologies are required

HUGHES

SANTA BARBARA RESEARCH CENTER
a subsidiary

MODIS CALIBRATION REQUIREMENTS ARE CHALLENGING BUT ACHIEVABLE

9/92
92-0620-147

BAND	WAVELENGTH (μm)	TEMP (TYP) (K)	REQUIRED ACCURACY (K)	REQUIRED ACCURACY (%)	PREDICTED ACCURACY (%)
20	3.750	300	0.18	0.75(0.50)	0.48
21	3.750	335	0.29	1.00	
22	3.959	300	0.25	1.00	0.46
23	4.050	300	0.25	1.00	0.45
24	4.465	250	0.19	1.00	0.66
25	4.515	275	0.24	1.00	0.45
26	4.565	275	0.24	1.00	0.44
27	6.715	240	0.27	1.00	0.59
28	7.325	250	0.32	1.00	0.44
29	8.550	300	0.53	1.00	0.25
30	9.730	250	0.42	1.00	0.31
31	11.030	300	0.34	0.50(0.25)	0.23
31H	11.030	400	1.18	1.00	
32	12.020	300	0.37	0.50(0.25)	0.21
32H	12.020	400	1.27	1.00	
33	13.335	260	0.62	1.00	0.24
34	13.635	250	0.58	1.00	0.26
35	13.935	240	0.55	1.00	0.29
36	14.235	220	0.47	1.00	0.36

SEA SURFACE TEMPERATURE BANDS HAVE GOALS LISTED IN PARENTHESIS.

HUGHES

SANTA BARBARA RESEARCH CENTER
a subsidiary

MODELING PREDICTS ON-ORBIT MWIR/LWIR CALIBRATION REQUIREMENTS CAN BE MET

9/92
92-0620-148

- LINKAGE BETWEEN PREFLIGHT AND ON-ORBIT CALIBRATION IS REQUIRED

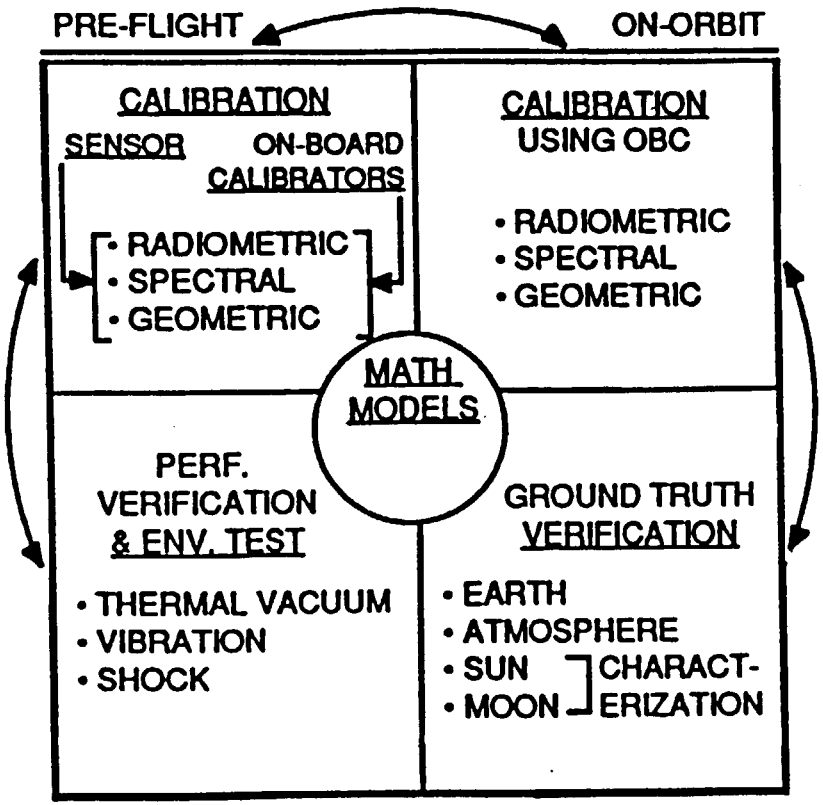

- ON BOARD CALIBRATORS LINK PREFLIGHT AND ON-ORBIT CALIBRATION

HUGHES

SANTA BARBARA RESEARCH CENTER
a subsidiary

MODIS PLAN STRESSES LINKAGE BETWEEN PREFLIGHT AND ON-ORBIT CALIBRATION

9/92
92-0620-149

CALIBRATION STRATEGY USES MULTIPLE MEASUREMENT/ CALIBRATION METHODOLOGIES

HUGHES

SANTA BARBARA RESEARCH CENTER
a subsidiary

- PREFLIGHT — USE MULTIPLE METHODS AND CORRELATE
  - LOOK FOR TRENDS IN CALIBRATION HISTORY THROUGHOUT PREFLIGHT LIFETIME
- INFLIGHT — ONBOARD CALIBRATORS
  - RADIOMETRIC, SPATIAL, SPECTRAL AND ONBOARD CALIBRATOR STABILITY MONITORING
- INFLIGHT — REMOTE SCENES
  - MULTIPLE EARTH SCENES
  - LUNAR SCENE
- PARTICIPATE IN CROSS CALIBRATION ACTIVITIES WITH OTHER EOS SENSORS
  - PREFLIGHT CALIBRATION SOURCES
  - INFLIGHT EARTH REFERENCE SCENES

9/92
92-0620-150

ROADMAP FOR PREFLIGHT CALIBRATION

HUGHES
SANTA BARBARA RESEARCH CENTER
a subsidiary

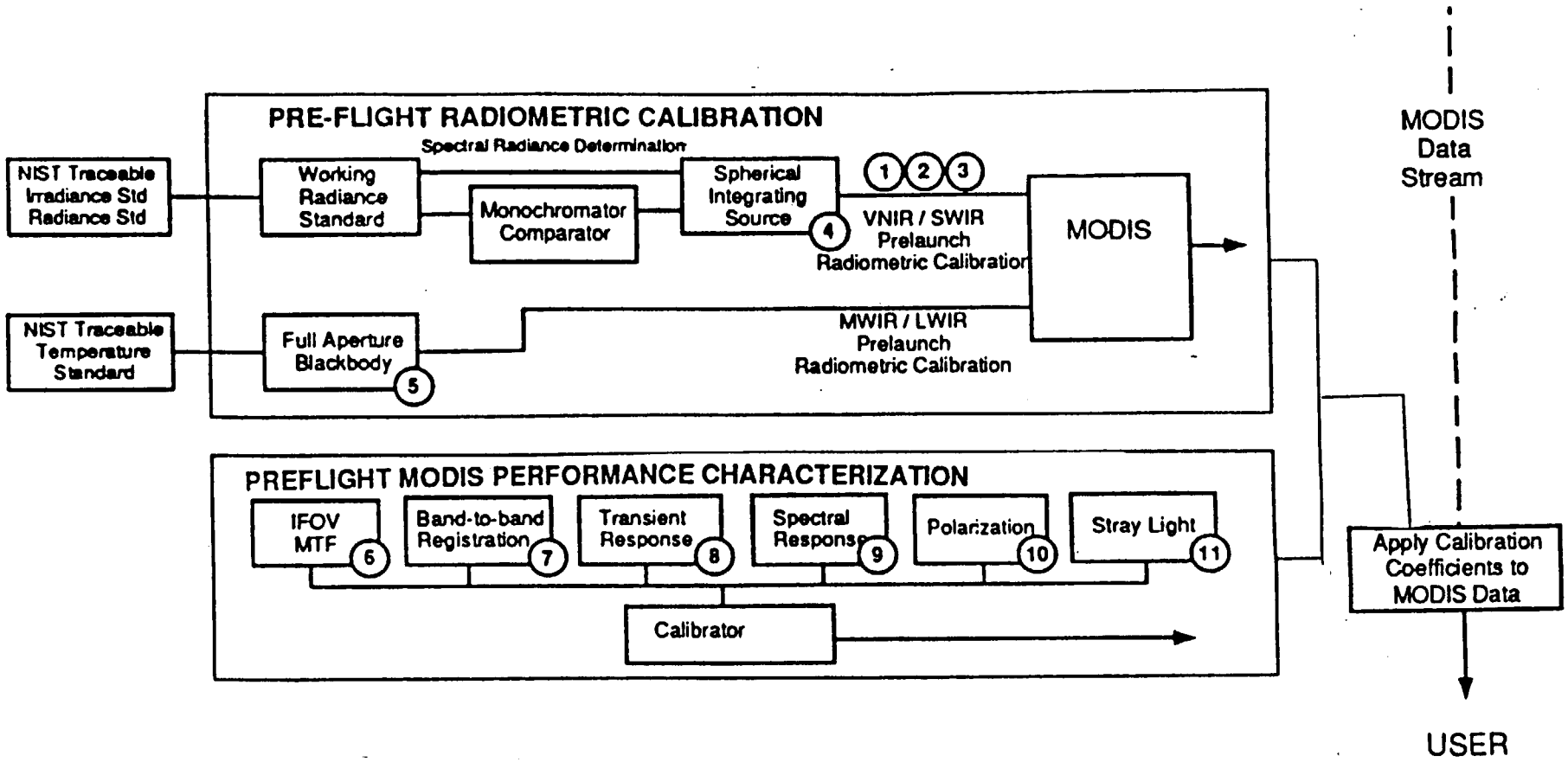

9/92
92-0620-151A

ROADMAP ILLUSTRATING PREFLIGHT AND ON-ORBIT CALIBRATION LINKAGE

HUGHES
SANTA BARBARA RESEARCH CENTER
a subsidiary

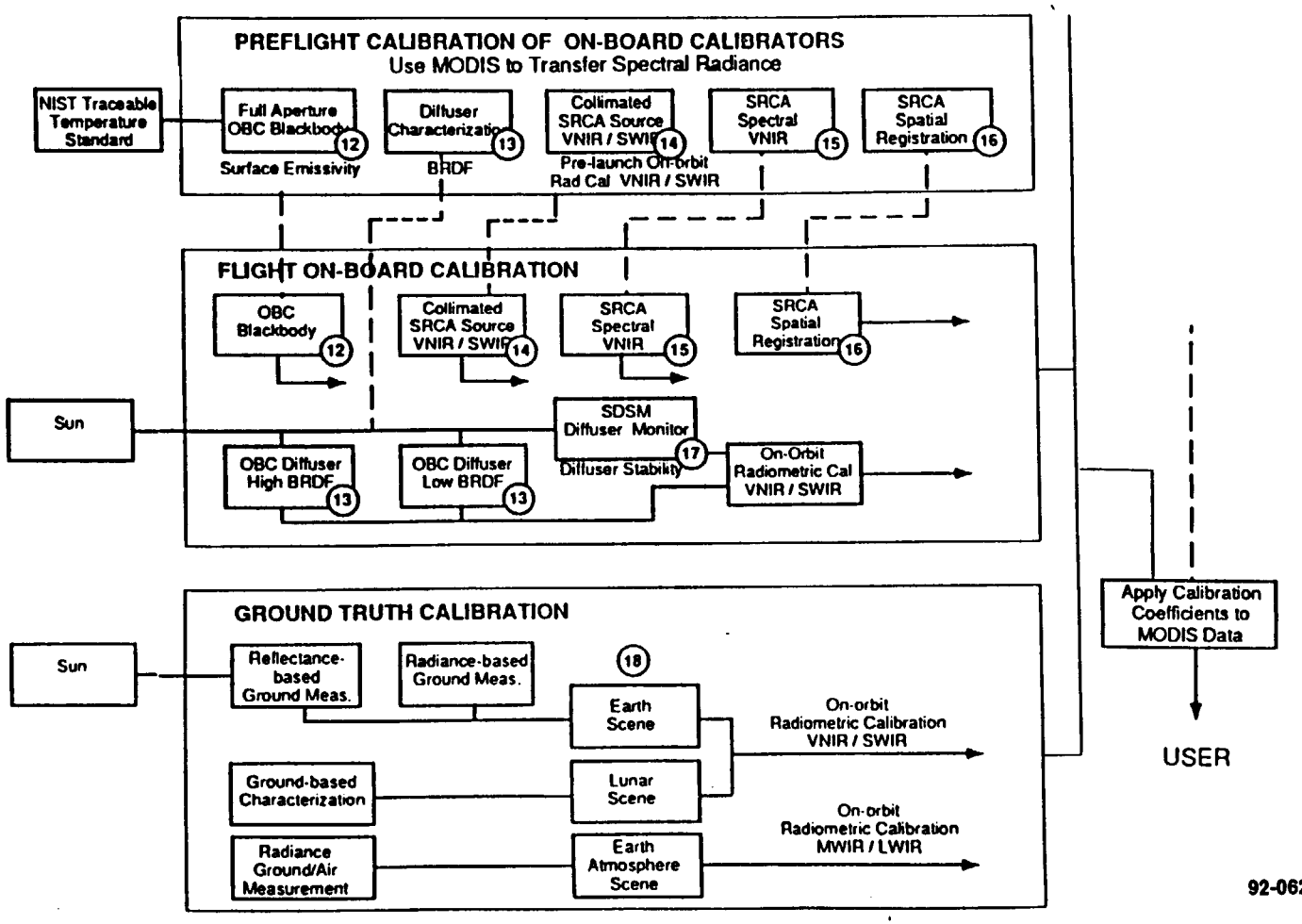

9/92
92-0620-151B

MATH MODELS ARE USED IN NUMEROUS WAYS THROUGHOUT THE PROGRAM LIFE

HUGHES

SANTA BARBARA RESEARCH CENTER
a subsidiary

- DEFINE AND ITERATE SYSTEM ENGINEERING REQUIREMENTS AND ERROR FLOWDOWN
- DEFINE CRITICAL FUNCTIONS FOR TEST HARDWARE AND ESTABLISH TOLERANCES
- PREDICT RESULTS PRIOR TO TESTING BASED ON AS-MEASURED PARAMETERS
- ANALYZE MEASUREMENTS
- PREDICT SENSOR PERFORMANCE
- SENSOR MEASUREMENTS USED TO VALIDATE MODEL
- DEFINE CALIBRATION COEFFICIENTS FOR MODIS DATABASE
- ACT AS A RESOURCE TO MONITOR, SIMULATE, AND TROUBLESHOOT CHANGES IN CALIBRATION/PERFORMANCE ONCE IN ORBIT
- ESTIMATED TOTAL MATH MODEL SET - 80
  - COMPLETED MODELS 20 OUT OF 80
  - IN PROCESS MODELS 15 OUT OF 80

9/92
92-0620-152

- **FOLLOWING SET OF MODELS ARE REPRESENTATIVE**

Model	Purpose	Model Number
Transfer spectral radiance/irradiance to spherical integrator source (SIS) via monochromator comparator – multiple methodologies	Source calibration, VIS/NIR/SWIR	1a, 2a 1b, 2b
SIS – MODIS	Instrument calibration, VIS/NIR/SWIR	4a, 4b
Full aperture blackbody – MODIS	Instrument calibration, MWIR/LWIR	5
MTF/IFOV – calibrator (phased reticles) – MODIS	Instrument characterization, all bands	6
Band-to-band registration – calibrator and phased reticle (CT/AT) – MODIS	Instrument characterization, all bands	7
Transient response – calibrator – MODIS	Instrument characterization, all bands	8
Spectral response – monochromator – MODIS	Instrument characterization, all bands	9
Polarization – calibrator – MODIS	Instrument characterization, all bands	10
Stray light response/calibrator/SIS/large aperture IR source – MODIS	Instrument characterization, all bands	11a, 11b
OBC blackbody – MODIS	Instrument calibration, MWIR/LWIR	12
OBC diffuser calibration	BRDF 0.4-2.40 μm, angle	13a
OBC solar-illuminated diffuser – MODIS	Instrument calibration, VIS/NIR/SWIR	13b
SRCA – filtered incandescent source – MODIS	Calibration transfer, VIS/NIR/SWIR	14a
SRCA – filtered incandescent source – MODIS	Instrument calibration check, VIS/NIR/SWIR	14b
Wavelength calibration – SRCA monochromator	λ calibration, VIS/NIR	15a
Spectral response – SRCA – MODIS	Instrument characterization, VIS/NIR	15b
Band-to-band spatial registration – OBC SRCA – MODIS	Instrument characterization, all bands	16
Diffuser – sun – solar illuminated diffuser stability monitor	Diffuser stability check, 0.4-2.3 μm	17
Ground truth – Earth/lunar/atmosphere – MODIS - several major models	Instrument calibration	18

HUGHES

SANTA BARBARA RESEARCH CENTER
a subsidiary

REPRESENTATIVE SAMPLING OF PERFORMANCE CHARACTERIZATION AND CALIBRATION MATH MODELS

MODIS
GSFC SBRC

9/92
92-0620-153

VIS/NIR/SWIR CALIBRATION ACCURACY NOT LIMITED BY AVAILABLE NIST LAMP STANDARDS

HUGHES

SANTA BARBARA RESEARCH CENTER
a subsidiary

NIST SPECTRAL RADIANCE AND IRRADIANCE CALIBRATION UNCERTAINTIES

SOURCE
SPECTRAL RADIANCE CALIBRATION
NBS SPECIAL PUBLICATION 250-1 (JAN 1987)

SPECTRAL IRRADIANCE CALIBRATIONS
NBS SPECIAL PUBLICATION 250-20 (SEPT 1987)

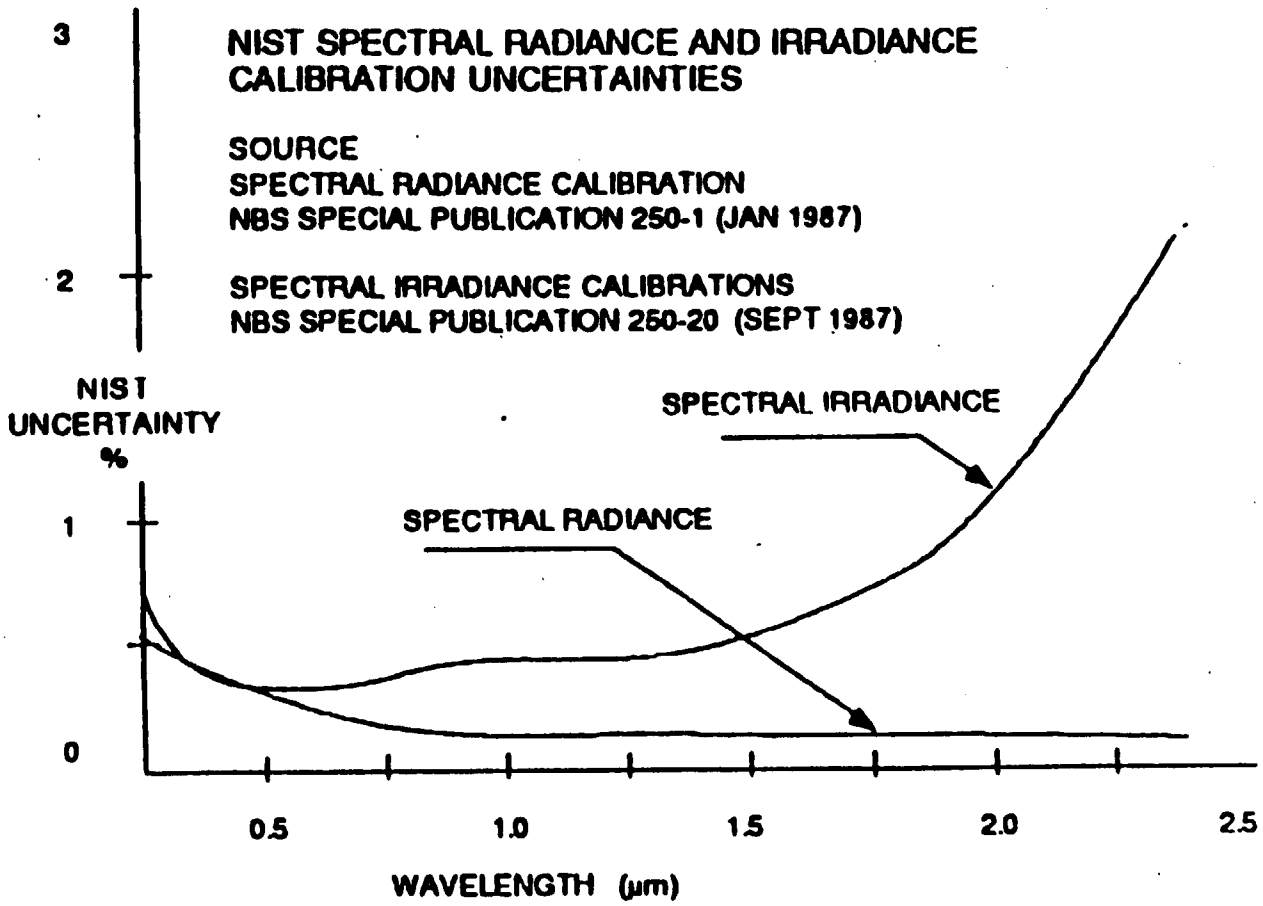

9/92
92-0620-154

Irradiance/radiance standards	0.5%
Transfer to working standard	1.0%
Halon diffuser	0.5%
Monochromator comparator	
Scattered light	1.0%
Wavelength calibration	0.3%
Nonuniform response	1.0%
Geometric factors	1.0%
SIS	
Current control	0.5%
Nonuniformity	0.5%
SNR	
Standard lamp usage	
Orientation	0.3%
Diffuser to lamp	0.5%
Current	0.5%
Linearity	1.5%
RSS total	2.8%

- CORRELATION WITH UNIV OF ARIZONA MEASUREMENTS (0.44 TO 0.87 μm) ON THEMATIC MAPPER PROGRAM
  - AVERAGE RATIO OF MEASUREMENTS 0.986
  - STANDARD DEVIATION OF 0.017

HUGHES

SANTA BARBARA RESEARCH CENTER
a subsidiary

SPHERICAL INTEGRATOR SOURCE CALIBRATION ACCURACY ADEQUATE FOR REFLECTANCE REGION

MODIS
GSFC SBRC

9/92
92-0620-155

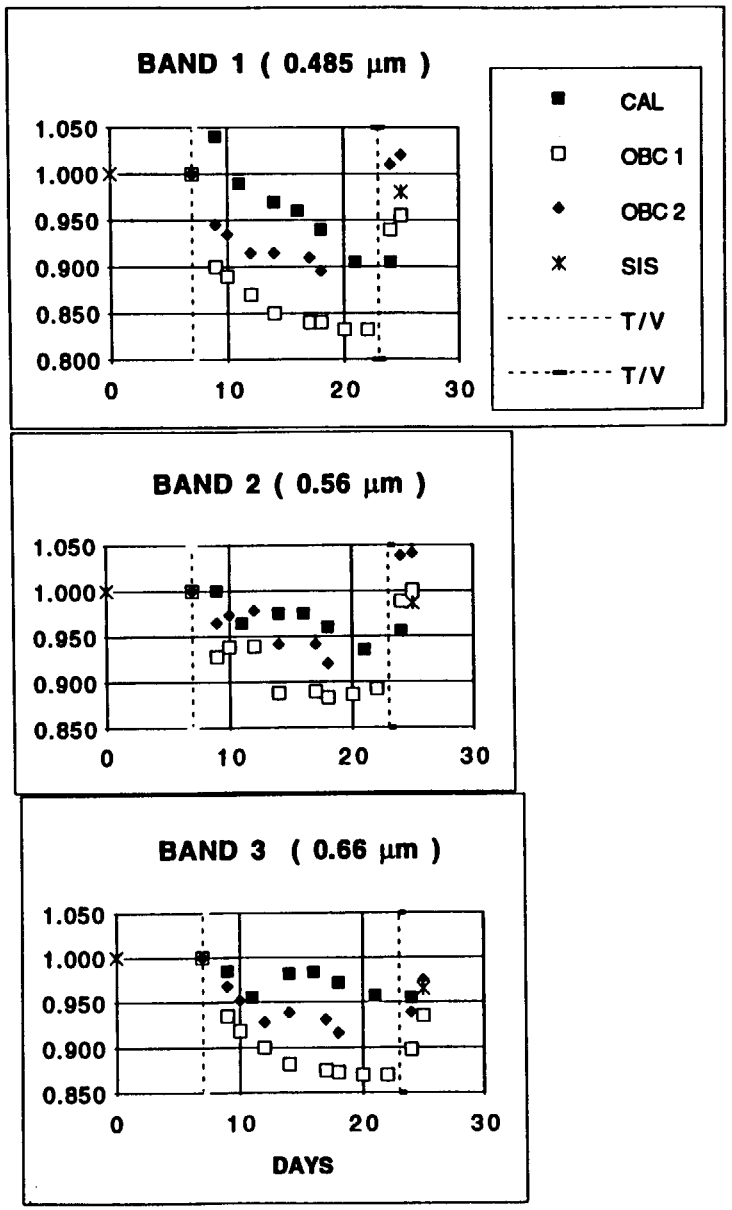

HUGHES

SANTA BARBARA RESEARCH CENTER
a subsidiary

ETM ANOMALOUS AMBIENT TO VACUUM EFFECTS DRIVE MODIS TESTING CONFIGURATION

9/92
92-0620-156

- SENSOR SIGNALS VARIED +5% TO -17%
- VARIATION WAS DEPENDENT UPON – SPECTRAL BAND AND CALIBRATION SOURCE USED

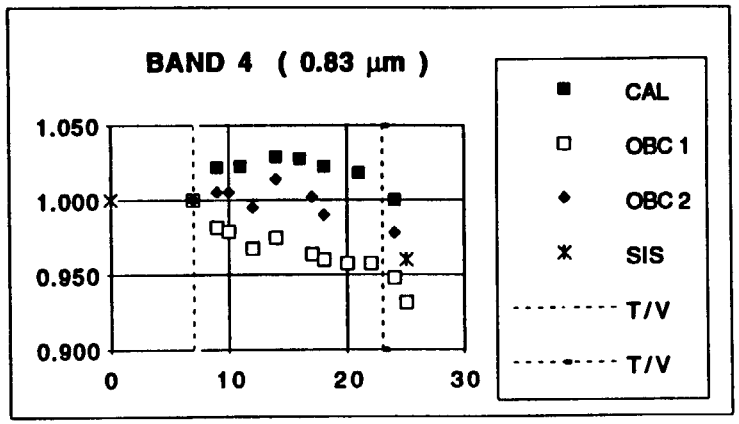

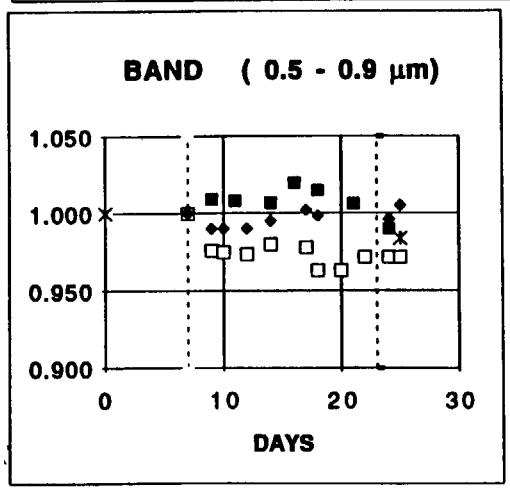

HUGHES

SANTA BARBARA RESEARCH CENTER
a subsidiary

ETM ANOMALOUS AMBIENT TO VACUUM EFFECTS DRIVE MODIS TESTING CONFIGURATION

9/92
92-0620-157

- PREFLIGHT TO ON-ORBIT LINKAGE REQUIRED
- AMBIENT TO VACUUM SHIFTS, IF PRESENT, NEED TO BE UNDERSTOOD
- TEST METHODOLOGY SUPPORTS THIS

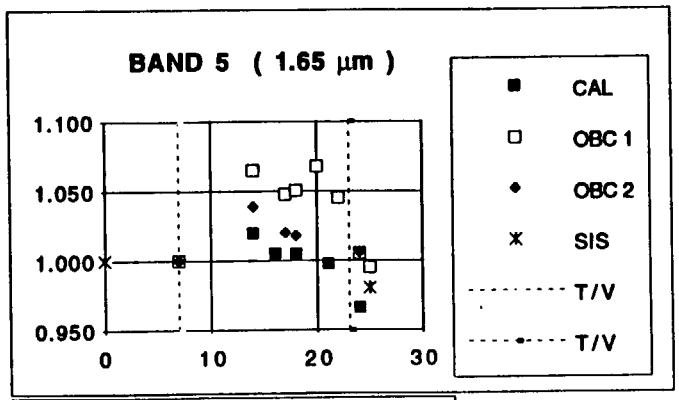

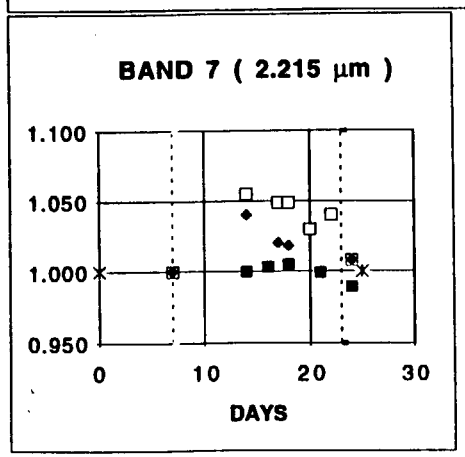

HUGHES

SANTA BARBARA RESEARCH CENTER
a subsidiary

ETM ANOMALOUS AMBIENT TO VACUUM EFFECTS DRIVE MODIS TESTING CONFIGURATION

9/92
92-0620-158

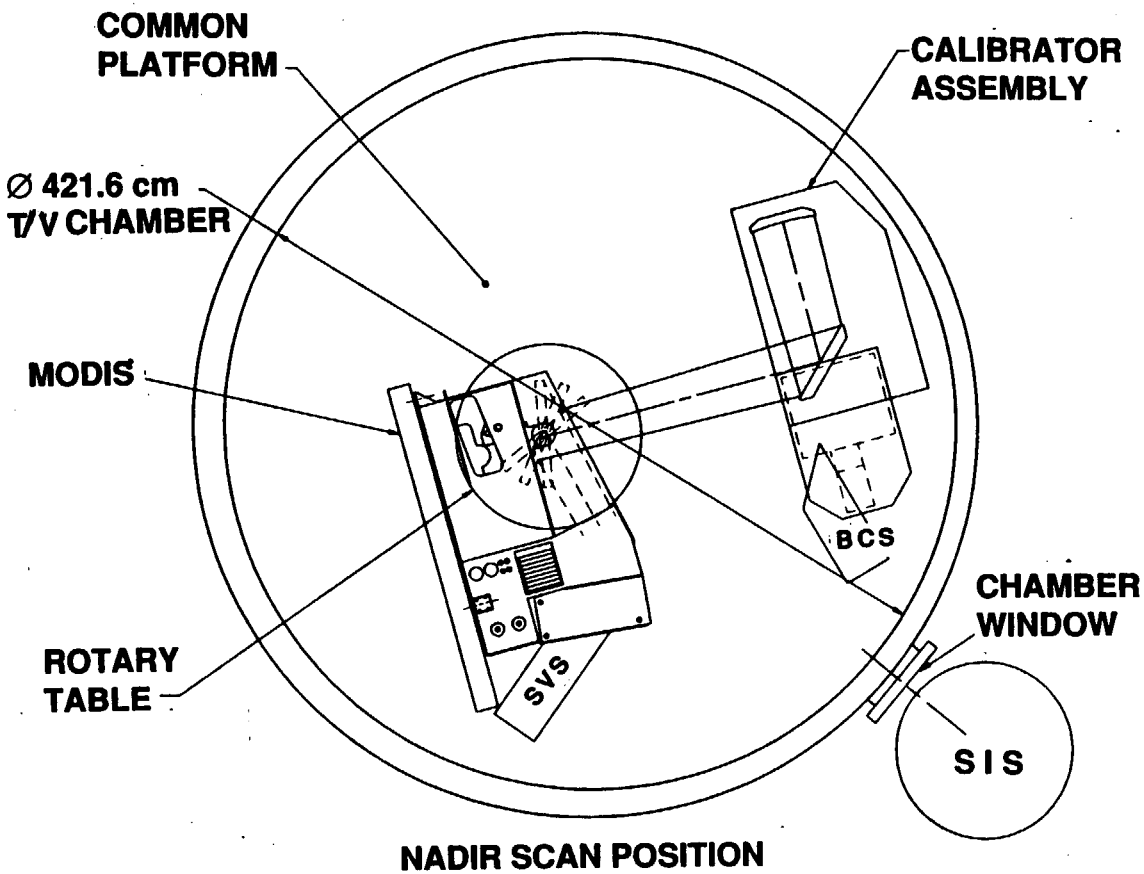

HUGHES

SANTA BARBARA RESEARCH CENTER
a subsidiary

T/V TEST CONFIGURATION DESIGNED TO UNDERSTAND POTENTIAL AMBIENT TO VACUUM SHIFTS

- SIS (100) LOCATED IN AMBIENT ENVIRONMENT
- CALIBRATOR ASSEMBLY LOCATED IN VACUUM
  - CALIBRATOR MONOCHROMATOR IN PRESSURIZED CHAMBER
    - ALLOWS CALIBRATOR THROUGHPUT IN AMBIENT/VACUUM TO BE CHARACTERIZED
    - ALLOWS UNAMBIGUOUS MEASUREMENT OF MODIS SPECTRAL RESPONSE IN AMBIENT/VACUUM

9/92
92-0620-160

TEST PARAMETER	SPEC PARA	TEST ENVIRONMENT	SCAN MIRROR STATUS	GSE OPTICAL STIMULI
SPATIAL – IFOV	3.3.1	AMB LAB	NONSCANNING	CALIBRATOR #1
RESPONSE UNIFORMITY	3.4.5.4			
SPECTRAL	3.3.3	AMB LAB AND T/V	NONSCANNING	CALIBRATOR #2
WAVELENGTH TOLERANCE	3.3.3.2	AMB LAB AND T/V		
OUT-OF-BAND	3.3.3.3	AMB LAB		
RIPPLE	3.3.3.4	AMB LAB AND T/V		
WAVELENGTH STABILITY	3.4.7.4	AMB LAB AND T/V		
WAVELENGTH ACCURACY	3.4.7.5	AMB LAB AND T/V		
POLARIZATION	3.3.5	AMB LAB	NONSCANNING	CALIBRATOR #3
MTF	3.4.2	AMB LAB AND T/V	SCANNING	CALIBRATOR #1
TRANSIENT RESPONSE	3.4.4	AMB LAB	SCANNING	CALIBRATOR #1
RADIOMETRIC PERFORMANCE	3.4.5	AMB LAB AND T/V	SCANNING	SIS(100) AND BCS
DYNAMIC RANGE	3.4.1			
SNR	3.4.1			
SYSTEM NOISE MEAS	3.4.5.5			
CH-TO-CH UNIFORMITY	3.4.5.3.2			
SYSTEM NOISE	3.4.5.5			
SYSTEM CROSSTALK	3.4.5.3.3	AMB LAB	NONSCANNING	CALIBRATOR #1
GEOMETRIC PERFORMANCE	3.4.6			
POINTING KNOWLEDGE	3.4.6.1	AMB LAB	NONSCANNING	CALIBRATOR #4
ALIGNMENT CHANGE	3.4.6.2	AMB LAB	NONSCANNING	CALIBRATOR #4
SPECTRAL BAND REG	3.4.6.3	AMB LAB AND T/V	SCANNING	CALIBRATOR #1
RADIOMETRIC STABILITY	3.4.7		SCANNING	
SHORT TERM	3.4.7.1	AMB LAB		SIS(100) AND BCS
LONG TERM	3.4.7.2	ANALYSIS		NA
SPECTRAL BAND-TO-BAND	3.4.7.3	AMB LAB AND T/V		SIS(100) AND BCS
STRAY LIGHT	3.4.8	AMB LAB	SCANNING	
DIRECT SUNLIGHT	3.4.8.1	AMB LAB		SOLAR TEST SOURCE
BRIGHT TARGET	3.4.8.2	AMB LAB		SIS(100) AND CAL #6
DARK TARGET	3.4.8.3	AMB LAB		SIS(100) AND CAL #6
WARM TARGET	3.4.8.4	AMB LAB		CALIBRATOR #5

HUGHES

SANTA BARBARA RESEARCH CENTER
a subsidiary

ALL MODIS PERFORMANCE PARAMETERS TO BE CHARACTERIZED/ CALIBRATED

MODIS
GSFC SBRC

9/92
92-0620-161

A COMPLEX SET OF CUSTOM OPTICAL STIMULI REQUIRED

HUGHES

SANTA BARBARA RESEARCH CENTER
a subsidiary

- FUNCTIONAL REQUIREMENTS
  - PROVIDE OPTICAL SYSTEM THAT OVERFILLS THE MODIS INSTRUMENT ENTRANCE APERTURE ACROSS THE FULL FIELD WITH A < 40 μrad IMAGE BLUR
  - GENERATE ACCURATELY KNOWN SPECTRAL RADIANCE LEVELS OVER THE 0.4 TO 14.5 μm SPECTRAL RANGE
  - PROVIDE KNIFE EDGE AND SLIT RETICLE PATTERNS THAT WILL ENABLE ACQUISITION OF LINE SPREAD FUNCTION (LSF) CROSS AND ALONG TRACK DATA FOR MODULATION TRANSFER FUNCTION (MTF) PERFORMANCE
  - PROVIDE KNIFE EDGE AND SLIT GEOMETRICAL RETICLE PATTERNS THAT WILL PERMIT ASSESSMENT OF CROSS AND ALONG TRACK SPECTRAL BAND REGISTRATION (SBR)

9/92
92-0620-161A

A COMPLEX SET OF CUSTOM OPTICAL STIMULI REQUIRED (CONT)

HUGHES

SANTA BARBARA RESEARCH CENTER
a subsidiary

- FUNCTIONAL REQUIREMENTS (CONT)
  - PROVIDES FEATURES THAT ENABLE OPTICAL ALIGNMENT OF THE MODIS INSTRUMENT TO THE OPTICAL STIMULI AND, IN ADDITION, MEASURE THE MODIS OPTICAL AXIS WITH RESPECT TO ALIGNMENT CUBE
  - PROVIDE A SPECTROPHOTOMETER TO ASSESS MODIS SPECTRAL CHANNEL PERFORMANCE, SUCH AS, CENTER WAVELENGTH, FULL WIDTH HALF MAXIMUM (FWHM), IN BAND SHAPE AND OUT OF BAND RESPONSE
  - PROVIDE SPECTRAL MONITORING OF CALIBRATOR OPTICAL ELEMENTS AMBIENT/VACUUM
  - PROVIDE FOR MEASUREMENT OF MODIS INSTRUMENT POLARIZATION IN VIS/NIR/SWIR

9/92
92-0620-161B

A COMPLEX SET OF CUSTOM OPTICAL STIMULI REQUIRED (CONT)

HUGHES

SANTA BARBARA RESEARCH CENTER
a subsidiary

- FUNCTIONAL REQUIREMENTS (CONT)
  - SPHERICAL INTEGRATOR SOURCE (SIS)
    - THIS PRIMARY RADIOMETRIC SOURCE WILL ALWAYS BE USED IN AMBIENT LABORATORY CONDITIONS
    - IT CAN CALIBRATE MODIS UNDER AMBIENT OR VACUUM CONDITIONS
    - IT IS CAPABLE OF HAVING ITS PERFORMANCE CHECKED AT OTHER FACILITIES
    - ITS CALIBRATION SHOULD BE TRACEABLE TO NIST STANDARDS
  - FULL APERTURE BLACKBODY CALIBRATION SOURCE (BCS) THAT CAN BE USED IN/OUT OF A VACUUM CHAMBER
  - FULL APERTURE SPACE VIEW SOURCE (SVS) THAT CAN BE USED IN/OUT OF A VACUUM CHAMBER
  - SOLAR TEST SOURCE (STS) THAT CAN SIMULATE SOLAR IRRADIANCE LEVELS

9/92
92-0620-161C

GSE BLACKBODY DESIGN DRIVEN BY MWIR/LWIR CALIBRATION ACCURACY

HUGHES

SANTA BARBARA RESEARCH CENTER
a subsidiary

- BCS 10-inch WIDE APERTURE ACCOMMODATES FULL FIELD OF MODIS
- COMPACT LENGTH FITS THERMAL/VACUUM CHAMBER PACKAGING LIMITATIONS
- DEMANDING CALIBRATION ACCURACY REQUIRES:
  - CAVITY EMITTANCE: >0.999
  - TEMPERATURE KNOWLEDGE ≤0.05K
  - TEMPERATURE UNIFORMITY: <0.1K
  - TEMPERATURE STABILITY OVER 6 minutes: ±0.02K
- TEMPERATURE SLEW RATE TO MINIMIZE TIME SPENT IN THERMAL/VACUUM CHAMBER: >0.03K/sec

9/92
92-0620-161D

SPHERICAL INTEGRATING SOURCE IS PRIMARY CALIBRATION FOR VIS/NIR/SWIR

HUGHES

SANTA BARBARA RESEARCH CENTER
a subsidiary

- RADIOMETRIC CALIBRATION SOURCE FOR VIS/NIR/SWIR
- INTEGRATING SPHERE SIZE
  - SPHERE DIAMETER — 100 cm
  - EXIT PORT DIAMETER — 46 cm
  - REMOVABLE PORT DIAMETER — 30 cm
- INTERIOR WALL PAINT — $BaSO_4$
- QUARTZ HALOGEN LAMPS — 37
  - 18-200W
  - 9-45W
  - 10-5W
- SOURCE MONITORING
  - LAMP CURRENT — 0.02%
- EFFECTIVE ALBEDO RANGE — 1.0 TO 0.001
- PROJECTED CALIBRATION ACCURACY — 3%

9/92
92-0620-161E

MODIS HAS A VERY COMPREHENSIVE IN-FLIGHT CALIBRATION CAPABILITY

HUGHES

SANTA BARBARA RESEARCH CENTER
a subsidiary

Type of Calibration	Source	Mechanism	Aperture	Spectral Bands	Usage Frequency (Max)	Other Comments
Radiometric	Space		Full	MWIR/LWIR	Once per scan line	
Radiometric	Sun	Solar illuminated diffuser	Full	VIS/NIR/ SWIR less Bands 8-16	Once per orbit	0.46 ± 0.03 effective albedo
Radiometric	Sun	Solar illuminated diffuser and screen	Full	VIS/NIR/ SWIR	Once per orbit	0.046 ± 0.005 effective albedo
DC Restore	Blackbody	Blackbody	Full	All	Once per scan line	
Radiometric	Incandescent sources	SRCA collimator	Partial	VIS/NIR/ SWIR	Available any time during orbit	
Spatial Registration	Incandescent and IR sources	SRCA collimator with spatial reticles	Partial	All	Available any time during orbit	
Spectral (MODIS)	Incandescent sources	SRCA grating monochromator with collimator	Partial	VIS/NIR/ SWIR	Available any time during orbit	Grating rotated to produce wave-length scan
Spectral (Monochro-mator)	Incandescent source with didymium glass	SRCA grating monochromator with photodiode	Full	0.40 μm to 0.90 μm	Available any time during orbit	Grating rotated to produce wave-length scan
Solar Diffuser Stability Monitor	Sun	SDSM using integrating sphere with bandpass filtered detectors	Full ?	VIS/NIR/ SWIR	Available once per orbit	Both high and low albedo levels

9/92
92-0620-162

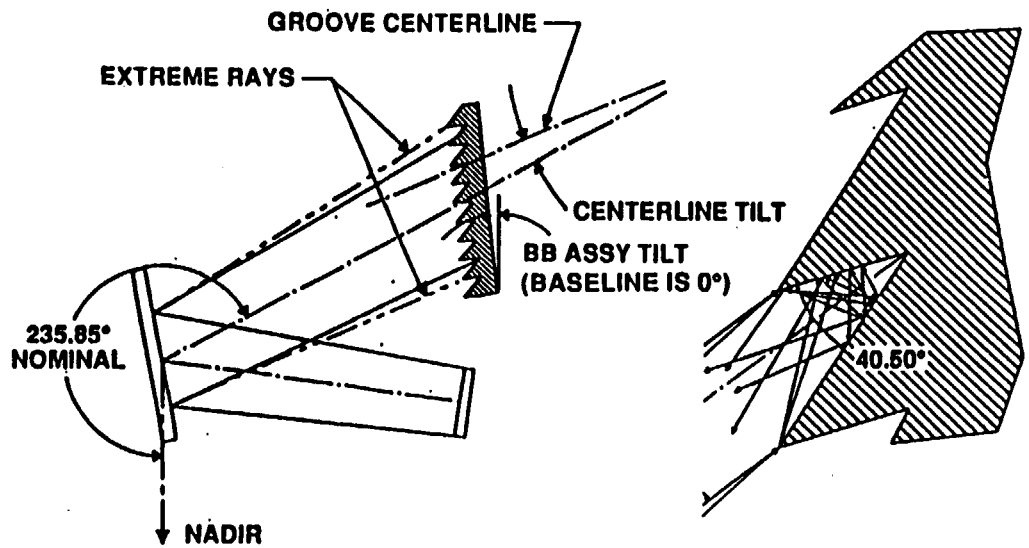

- FULL-APERTURE ILLUMINATION
- BLACKBODY SPATIAL AND TEMPERATURE KNOWLEDGE — 0.1K
- EMISSIVITY — >0.992
- CAVITY V-GROOVE INCLUDED ANGLE — 40.6 DEG
- SPECULAR BLACK PAINT
- GROOVE TIP AND VALLEY AREA EFFECTS — <10%

- CALIBRATION ACCURACY PREDICTION — 0.7 - 0.2%

HUGHES

SANTA BARBARA RESEARCH CENTER
a subsidiary

HIGH CALIBRATION ACCURACY IMPOSES STRICT REQUIREMENTS ON BLACKBODY DESIGN

MODIS
GSFC SBRC

9/92
92-0620-163

FULL-APERTURE SOLAR DIFFUSER PROVIDES ACCURATE AND CORRECTABLE RADIOMETRIC CALIBRATION

HUGHES
SANTA BARBARA RESEARCH CENTER
a subsidiary

• FULL-APERTURE WITH FIXED POSITION DIFFUSER	
• DIFFUSER BRDF	0.315 SR^{-1}
• SUN-DIFFUSER ANGLE	62.8°
• EFFECTIVE ALBEDO	
DIFFUSER	46%
DIFFUSER + SCREEN	4.6%
• SPECTRAL RANGE — VIS/NIR/SWIR BANDS 1-19	
• DIFFUSER STABILITY —	15%
CORRECTABLE WITH SDSM	1%
• MATERIAL	SPECTRALON
• THREE CALIBRATION MODES	AVAILABLE ALBEDO
PRIMARY	46%, 4.6%
SECONDARY (DOOR FAILED, BACKUP SCREEN ACTUATOR)	46%, 4.6%
TERTIARY (SCREEN ACTUATOR FAILED)	4.6%

9/92
92-0620-164

SDSM TRACKS SOLAR DIFFUSER REFLECTANCE

HUGHES

SANTA BARBARA RESEARCH CENTER
a subsidiary

- REQUIRED TO TRACK CHANGES IN SOLAR DIFFUSER REFLECTANCE AT THE 0.5% LEVEL
- THE SUN SHALL BE USED AS A REFERENCE SOURCE
- THE SDSM WILL VIEW THREE SCENES
  - UNILLUMINATED SURFACE FOR DC RESTORATION
  - DIRECT SUN FOR A CONTINUING REFERENCE
  - SOLAR ILLUMINATED DIFFUSER
- REFLECTANCE REGION SHALL BE MONITORED WITH 12 BANDS DISTRIBUTED ACROSS 0.4 TO 2.3 μm
- ENTRANCE PORT IS SQUARE APERTURE SUCH THAT SUN PROVIDES A UNIFORM ILLUMINATION
- SUN AND DIFFUSER ILLUMINATION SHALL BE SIMILARLY DISTRIBUTED OVER INTEGRATING CAVITY WALL

9/92
92-0620-165

THE SRCA MUST HAVE MULTIPLE ON-ORBIT CALIBRATION CAPABILITIES

HUGHES

SANTA BARBARA RESEARCH CENTER
a subsidiary

- RADIOMETRIC CALIBRATION OF ANY OR ALL REFLECTANCE BANDS (0.4 TO 2.2 μm)
- RELATIVE SPECTRAL RESPONSE — CENTER WAVELENGTH, FWHM AND BAND SHAPE
- SPECTRAL SELF CALIBRATION USING DIDYMIUM ABSORPTION GLASS (0.4 TO 1.0 μm)
- SPECTRAL BAND REGISTRATION (SBR) FOR ALL BANDS (0.4 TO 14.3 μm)
- THERMAL CONSTRAINTS FOR SRCA USAGE
  - 20% DUTY CYCLE
  - USE ONE ORBIT WITH FOUR ORBIT RECOVERY
  - USE TWO CONSECUTIVE ORBITS AND EIGHT ORBIT RECOVERY

9/92
92-0620-166

REQUIREMENTS FOR SRCA FUNCTIONAL MODES ON-ORBIT OPERATION

HUGHES

SANTA BARBARA RESEARCH CENTER
a subsidiary

- RADIOMETRIC CALIBRATION MODE ACCURACY - 5%
- SPECTRAL BAND REGISTRATION (SPATIAL) - 0.1 IFOV
- MODIS RELATIVE SPECTRAL RESPONSE - 1 nm
- SRCA SELF SPECTRAL CALIBRATION - 0.5 nm

9/92
92-0620-167