MODIS TECHNICAL TEAM MEETING
HANDOUT A : March 21, 1991 D. Han

NEED FOR DATA COMPRESSION

- Data Storage
- Data Distribution
- Direct Broadcast
- Browse Data

END-TO-END MODIS DATA FLOW FROM INSTRUMENT TO USERS

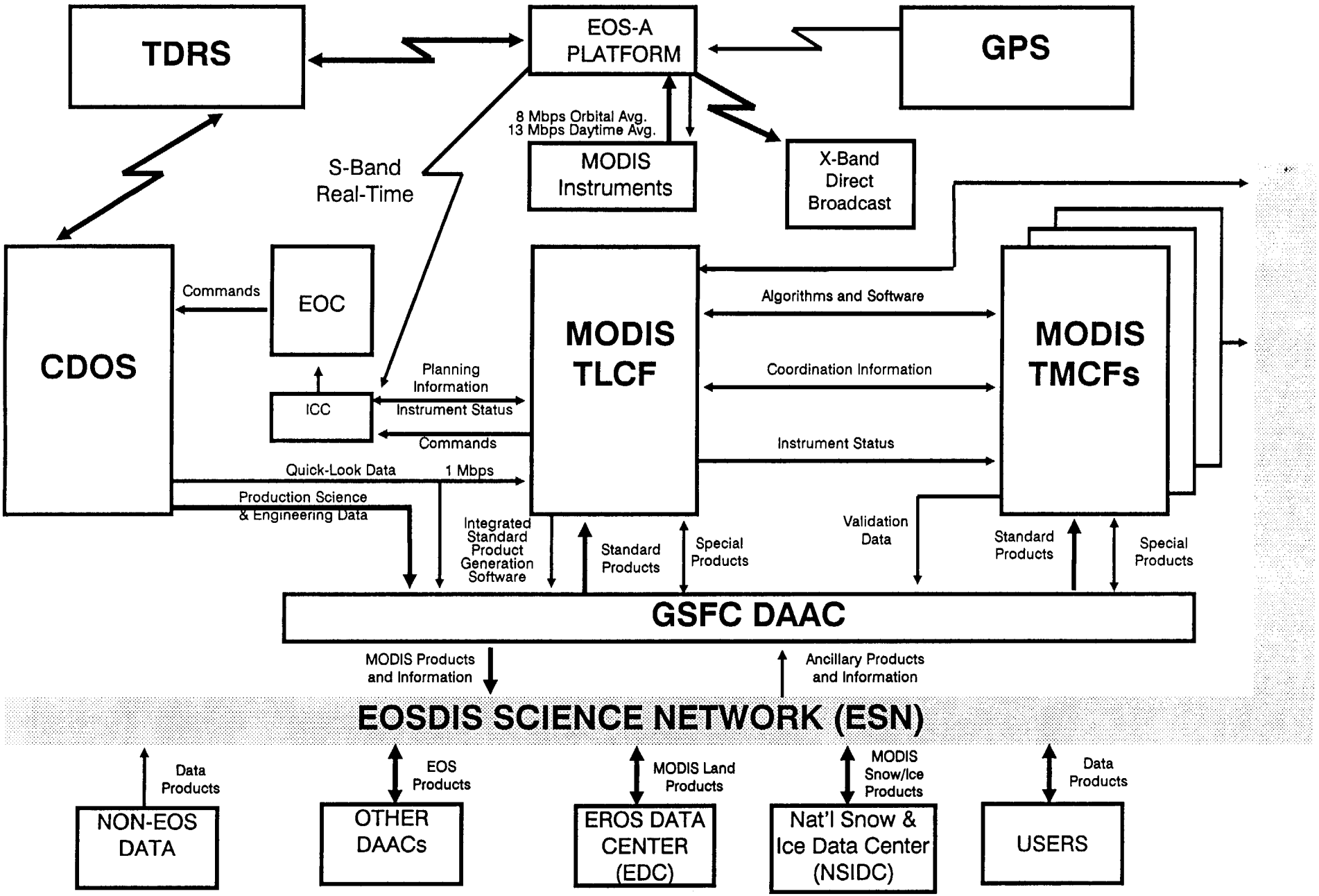

MODIS-N AND MODIS-T Data Rate and Volume Estimates

Earth Radius (km)	6371
Satellite Altitude (km)	705
Orbital Period (min)	98.9
Modis-N # 1000 m REF channels	12
Modis-N # 500 m REF channels	3
Modis-N # 250 m REF channels	2
Modis-N # 1000 m TIR channels	17
Modis-N # 500 m TIR channels	2
Modis-T # 1.1 km REF channels	32
MODIS-N # bits/REF channel	12
MODIS-N # bits/TIR channel	12
MODIS-T # bits/REF channel	13
MODIS-N REF Duty Cycle	50%
MODIS-N TIR Duty Cycle	100%
MODIS-T REF Duty Cycle	45%
MODIS-N # Along-track IFOVs	8
MODIS-T # Along-track IFOVs	30
MODIS-N # Detectors	648
MODIS-T # Along-track detectors	30
MODIS-N # Maximum scan angle (deg)	55
MODIS-T # Maximum scan angle (deg)	45
MODIS-N # IFOV FWHM (deg)	8.13E-02
MODIS-T # IFOV FWHM (deg)	8.94E-02
MODIS-N # pixels along-scan/on-Earth	1354
MODIS-T # pixels along-scan/on-Earth	1007
MODIS-N Scan Period (sec)	1.2
MODIS-T Scan Period (sec)	4.6
MODIS-N VIS Data (megabits/scan)	7.3
MODIS-N TIR Data (megabits/scan)	3.2
MODIS-N Daytime Data (megabits/scan)	10.5
MODIS-T Daytime Data (megabits/scan)	12.6
MODIS-N # Scans/Orbit	5000
MODIS-T # Scans/Orbit	579
MODIS-N Daytime Data Rate (mbps)	8.9
MODIS-N Nighttime Data Rate (mbps)	2.7
MODIS-T Daytime Data Rate (mbps)	2.7
MODIS-N Orbital Ave Data Rate (mbps)	5.8
MODIS-T Orbital Ave Data Rate (mbps)	1.2 ?
MODIS-N Daily Data Volume (gigabytes)	62.6
MODIS-T Daily Data Volume (gigabytes)	13.1
Total Daily Data Volume (gigabytes)	75.8
MODIS-N Volume (gigabytes) Level-1A	65.8
MODIS-T Volume (gigabytes) Level-1A	13.8
Total Daily Volume (gigabytes) @1A	79.6
MODIS-N Volume (gigabytes) Level-1B	108.2
MODIS-T Volume (gigabytes) Level-1B	22.0
Total Daily Volume (gigabytes) @1B	130.2
Total Daily Volume (gigabytes) @A&1B	209.7

MODIS LONG-TERM ARCHIVE STORAGE REQUIREMENTS (GIGABYTES PER DAY)

DATA PRODUCT	PRODUCT LEVEL 1	1B	2	2/	3	TOTAL
Navigation		18.7				18.7
Calibration		6.8				6.8
Spacecraft Ancillary	4.3					4.3
At-Satellite Radiances	75.3	104.7				180.0
Water-Leaving Radiances			10.1	4.0	6.6	20.7
Single Scattering Aerosol Radiances			8.2	2.6		10.9
Angstrom Exponents			0.3	0.4		0.8
Chlorophyll-A Concentrations (Case 1)			0.3	0.4	0.2	1.0
Chlorophyll-A Concentrations (Case 2)			0.0	0.0	0.2	0.3
Chlorophyll-A Fluorescence			0.3	0.4	0.2	1.0
CZCS Pigment Concentrations			0.3	0.4	0.2	1.0
Sea-Surface Temperature				1.1	0.2	1.3
Sea-Ice Cover				0.1	0.1	0.2
Attenuation at 490 nm			0.3	0.4	0.2	1.0
Detached Coccolith Concentration			0.1	0.1	0.2	0.5
Phycoerythrin Concentrations			0.3		0.2	0.5
Dissolved Organic Matter			0.3	0.4	0.2	1.0
Suspended Solids			0.3	0.4	0.2	1.0
Glint Field			0.3	0.4	0.2	1.0
IPAR			0.1	0.1	0.1	0.2
Ocean Cal Data Sets						0
Primary Production (Oceans)			0.3	0.4	0.2	1.0
Land-Leaving Radiances			2.7	14.4	2.8	20.0
Topographically Corrected Radiance			2.7	14.4	2.8	20.0
Vegetation Index				3.8	1.7	5.5
Polarized Vegetation Index				3.8	1.7	5.5
Land Surface Temperature				0.5	0.2	0.6
Thermal Anomalies				0.5		0.5
Evapotranspiration					0.1	0.1
Primary Production (Land)					0.1	0.1
Snow Cover				0.2	0.0	0.2
Spacial Heterogeneity (not sized here)						0
Land Cover Type					0.0	0.0
Bidirectional Reflectance, BRDF					0.0	0.0
Cloud Mask			0.3	1.6		1.9
Cloud Fraction					0.0	0.0
Cloud Effective Emissivity				0.1	0.0	0.1
Cloud-Top Temperature and Pressure				0.3	0.0	0.3
Cloud Optical Thickness (0.66 Ìm)				0.1	0.0	0.1
Cloud Particle Effective Radius				0.1	0.0	0.1
Cloud Particle Thermodynamic Phase				0.0	0.0	0.0
Aerosol Optical Depth (0.41 to 2.13Ìm)					0.0	0.0
Aerosol Size Distribution					0.0	0.0
Aerosol Mass Loading					0.0	0.0
Atmospheric Stability				0.1	0.0	0.1
Total Precipitable Water				1.7	0.0	1.7
Total Ozone				0.1	0.0	0.1
Browse		6.5	1.4	2.7	1.0	5.0
Metadata (Not sized here)						0
Ocean Discipline Subtotal (L-2/3)			21.8	12.1	9.5	43.4
Land Discipline Subtotal (L-2/3)			5.4	37.6	9.5	52.5
Atmosphere Discipline Subtotal (L-2/3)			0.3	4.0	0.0	4.3
Total	79.6	136.7	28.9	56.4	20.0	315.0

MODIS Data Volume Estimates
(GigaBytes)

	Level-0	Level-1A	Level-1B	Level-2	Level-3
Per Day	76	80	137	85	20
Per Year	28,000	29,000	50,000	31,000	7,000

Data Rate Comparison
MODIS vs. Heritage Instruments

	HIRS	VAS	CZCS	AVHRR		MODIS-T	MODIS-N			
				GAC	LAC		1 km	500 m	250 m	Total
PIXELS/LINE	56	1820	1,968	409	2,048	1,007	1,354	2708	5416	
LINES/SECOND	0.2		6.0	2	6	6.5	6.7	13.4	26.9	
VIS BANDS	1	1	5	2	2	32	12	3	2	
IR BANDS	19	12	1	3	3	0	17	2	0	
BIT QUANT	13	8/10	8	10	10	13	12	12	12	
VIS COVERAGE	100%	100%	8%	50%	10%	50%	50%	50%	50%	
IR COVERAGE	100%	100%	8%	100%	10%	0%	100%	100%	100%	
VIS RATE (Kbps)	0.1		37.8	8.2	24.6	1,360	653	653	1748	3055
IR RATE (Kbps)	2.8		7.6	24.5	36.9	0	1851	871	0	2722
AVG RATE (Kbps)	2.9	28,000	45.3	32.7	61.4	1,360	2504	1524	1748	5777

RATIO OF MODIS TO HIRS	2461
RATIO OF MODIS TO CZCS	158
RATIO OF MODIS TO AVHRR	76
RATIO OF MODIS TO ALL ABOVE	50

MODIS DATA DISTRIBUTION
(GigaBytes Per Day)

FROM	TO	DATA DESCRIPTION	DATA VOLUME
CDOS	GSFC	All Level-0 Products	76
GSFC	MODIS Investigators	10% of Level-1A Products 50% of Level-1B Products 100% of Level-2 Products 100% of Level-3 Products	182
GSFC	Other Investigators	5% of Level-1B Products 10% of Level-2 Products 10% of Level-3 Products	17
GSFC	EDC	Level-1B Land Products	39
GSFC	Langley Research Center	100% of Level-1B Products	130
GSFC	National Snow and Ice Data Center (NSIDC)	Level-1B for Snow and Ice Products	4

MODIS SCIENCE DATA DISTRIBUTION
(GigaBytes Per Day)

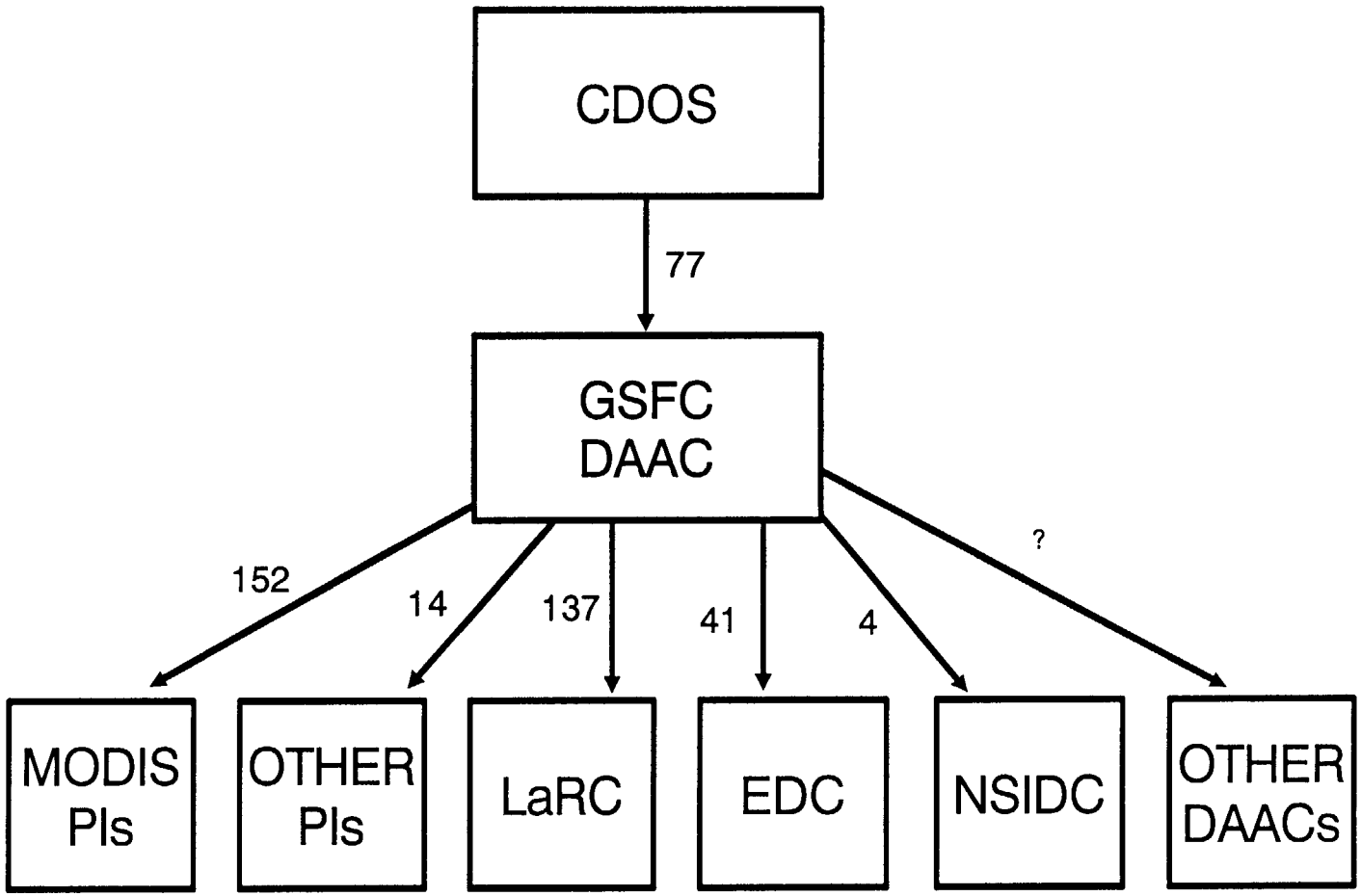

DIRECT BROADCAST

Data Rate	13 Megabits per second

(100% of raw data, daytime average rate)

On-board data compression techniques can be used

BROWSE DATA

- Volume: 12 GigaBytes per day (5% of Level-1B, -2, and -3)
- Lossy Compression Can Be Used

GLOBAL DIGITAL ELEVATION MODEL (DEM) FOR LEVEL-1B MODIS LAND DATA PROCESSING

If one hundred meter spacing digital elevation data are used to process Level-1B MODIS land data, and 4 bytes are used for each elevation point, the total on-line data storage requirement can be estimated.

The surface of the Earth is approximately $5 \cdot 10^8$ km^2.
The land area is $1.5 \cdot 10^8$ km^2 (at 30%).
At 100m spacing, there are 100 points per square kilometer.
Thus there are a total of $1.5 \cdot 10^{10}$ points.
If 4 bytes are used to store each elevation,
then the total storage required for the global land area is 60 GBytes.
This assumes that the point elevations are stored according to their location on the Earth's surface, so that location need not also be stored.

The storage required for DEM data available from USGS is much larger because of the format. A total storage of about 133 GBytes is required to cover the United States for the 3 arc second USGS DEM.

A data base of this size has major implications for storage and memory. If compression techniques could be developed that would allow fast de-compression/compression, this would enable a major savings in cost and CPU requirements.

ISSUES

- Transparent
- Impact on Processing
- Reliability/Risk
- Off-the-Shelf vs. Special Purpose (Hardware/Software)
- Cost